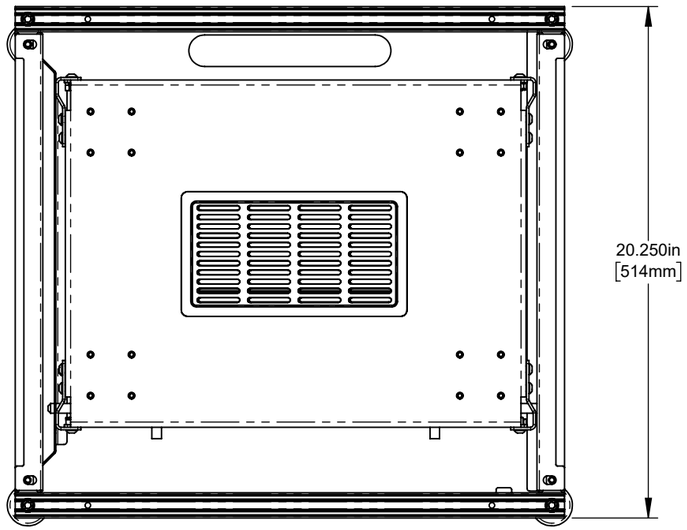


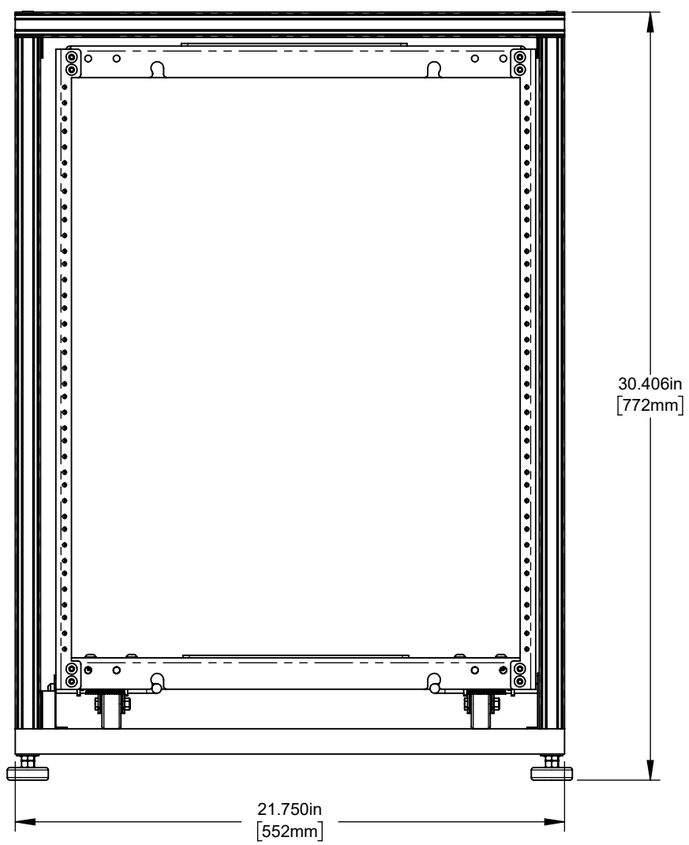


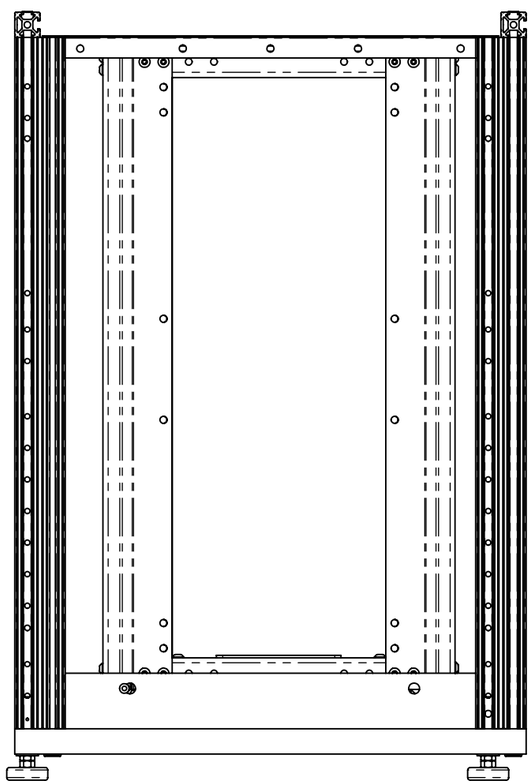

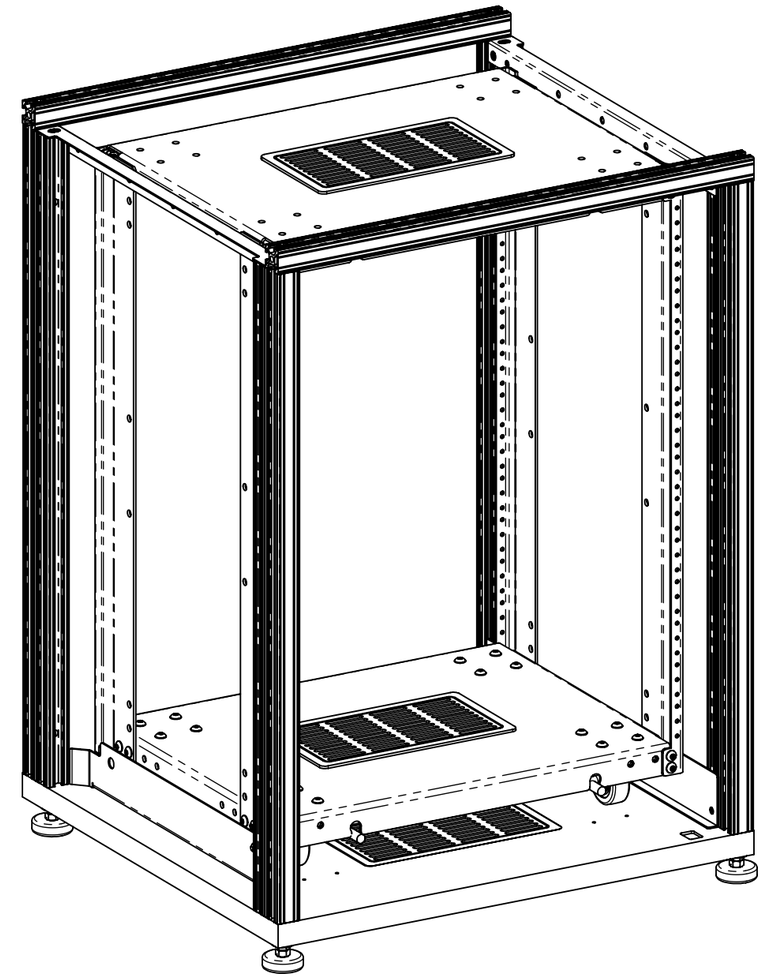

| | |
|---|---|
| QTY | NEXT ASSEMBLY |
| RoHS Compliant | |

***UNLESS OTHERWISE SPECIFIED:***
- ALL THREADS TO BE CLASS 2
- COUNTERSINK ALL TAPPED HOLES
- DEBURR HOLES AND BREAK SHARP EDGES
- STAMP, ETCH, OR MARK DRAWING NUMBER AND REVISION LETTER ON A NON-CRITICAL SURFACE.
- SURFACE FINISH TO BE 63 RMS
- TOLERANCES: .X ± .1
  .XX ± .01
  .XXX ± .005
  .XXXX ± .0005
  X° ± 1°
  .X° ± .5°

CAD Solidworks

3rd ANGLE PROJECTION

***PROPRIETARY INFORMATION:*** THIS MATERIAL AND THE CONTENTS THEREOF ARE CONSIDERED THE PROPERTY OF SALAMANDER DESIGNS, AND THE DISCLOSURE TO UNAUTHORIZED INDIVIDUALS OR DISSEMINATION, PUBLICATION, OR COPYING THEREOF IS PROHIBITED WITHOUT PRIOR WRITTEN CONSENT BY **SALAMANDER DESIGNS** OF BLOOMFIELD, CONNECTICUT.

SALAMANDER DESIGNS
811 BLUE HILLS AVE.
BLOOMFIELD, CT 06002
/T/ 860.313.0525 /F/ 860.313.0526

SIZE: B

TITLE: C-FRAME INTERIOR KIT

| | | | |
|---|---|---|---|
| MATERIAL: SEE NOTE | | SURFACE TREATMENT | |
| DRAWN BY: G.KESSLER | DATE: xxx | HEAT TREATMENT | |
| ENGINEER: xxx | CHECKED BY | SCALE: xx | SHEET: 1 OF 1 |

DRAWING NUMBER: SD_FI_C30_CRK_B In Frame

REV: xx