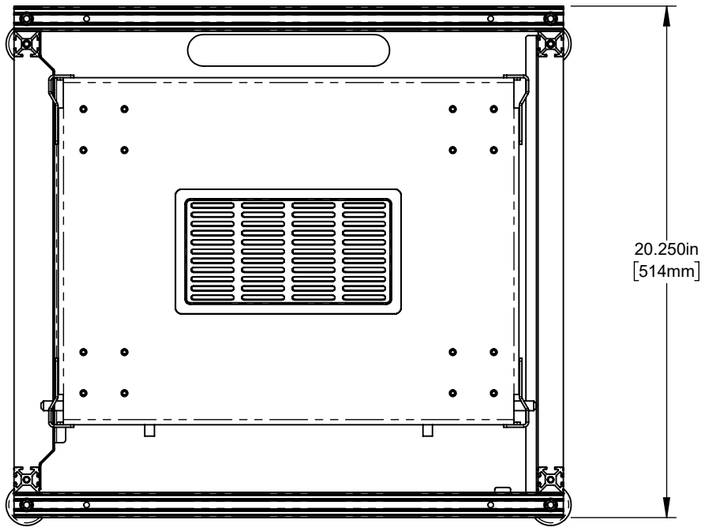

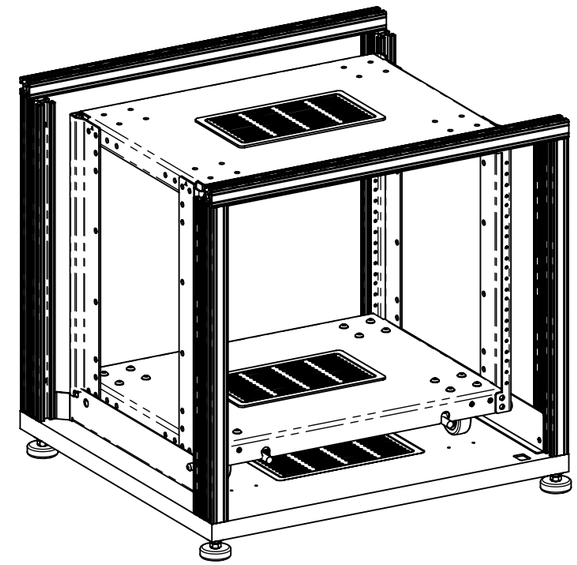

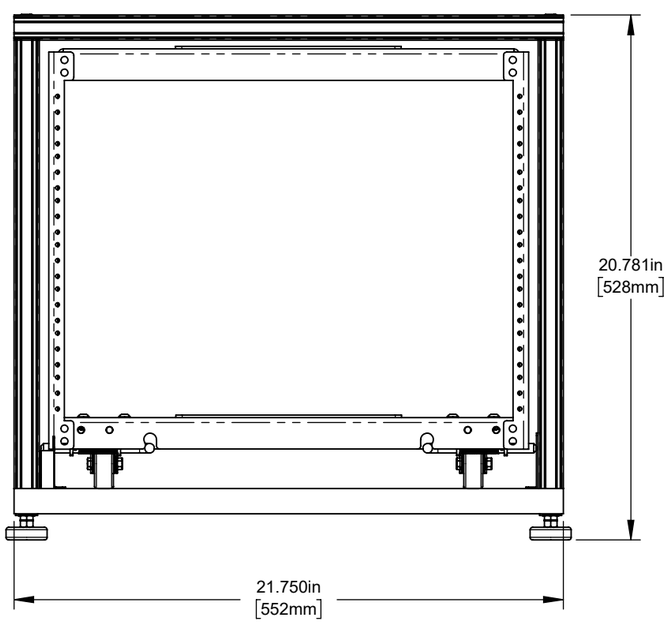

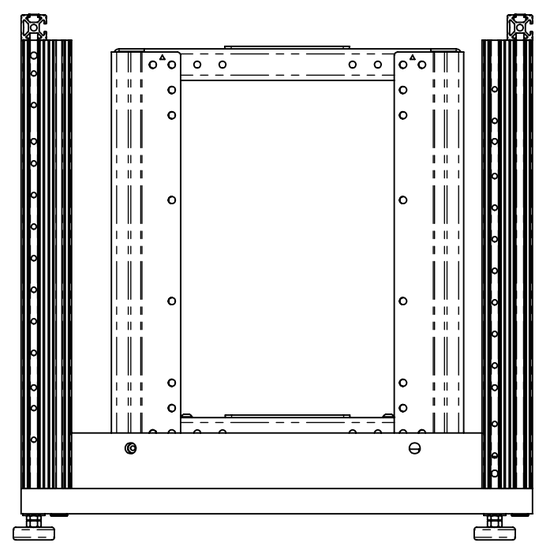

UNLESS OTHERWISE SPECIFIED:
- ALL THREADS TO BE CLASS 2
- COUNTERSINK ALL TAPPED HOLES
- DEBURR HOLES AND BREAK SHARP EDGES
- STAMP, ETCH, OR MARK DRAWING NUMBER AND REVISION LETTER ON A NON-CRITICAL SURFACE.
- SURFACE FINISH TO BE 63 RMS
- TOLERANCES: .X ± .1
  .XX ± .01
  .XXX ± .005
  .XXXX ± .0005
  X° ± 1°
  .X° ± .5°

QTY	NEXT ASSEMBLY
RoHS Compliant	

CAD Solidworks

3rd ANGLE PROJECTION

PROPRIETARY INFORMATION: THIS MATERIAL AND THE CONTENTS THEREOF ARE CONSIDERED THE PROPERTY OF SALAMANDER DESIGNS, AND THE DISCLOSURE TO UNAUTHORIZED INDIVIDUALS OR DISSEMINATION, PUBLICATION, OR COPYING THEREOF IS PROHIBITED WITHOUT PRIOR WRITTEN CONSENT BY **SALAMANDER DESIGNS** OF BLOOMFIELD, CONNECTICUT.

SALAMANDER DESIGNS
811 BLUE HILLS AVE.
BLOOMFIELD, CT 06002
/T/ 860.313.0525 /F/ 860.313.0526

SIZE: B

TITLE: C-FRAME INTERIOR KIT

MATERIAL: SEE NOTE		SURFACE TREATMENT	
DRAWN BY: G.KESSLER	DATE: xxx	HEAT TREATMENT	
ENGINEER: xxx	CHECKED BY	SCALE: xx	SHEET: 1 OF 1

DRAWING NUMBER: SD_FI_C20_CRK_B IN FRAME

REV: xx